CHECK LIST
CLIENT MUST INITIAL

FRONT ELEVATION INI.: _____

PLAN VIEW INI.: _____

SIDE ELEVATION INI.: _____

SETDOWN DETAIL INI.: _____

FLOOR PENETRATION DETAIL INI.: _____

ROOF PENETRATION DETAIL INI.: _____

ROUGH DOOR OPENING DETAIL INI.: _____

CONTROL BOX LOCATION INI.: _____

COMMENTS:

CLIENT SIGNATURE:

Liberty Left Mast Car & Door Configuration Options

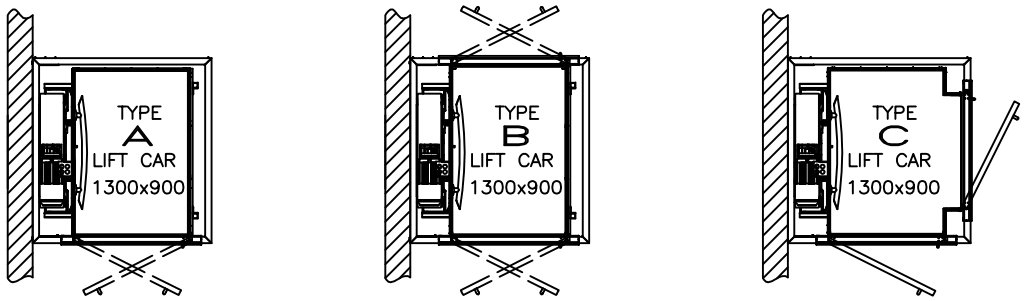

Liberty Right Mast Car & Door Configuration Options

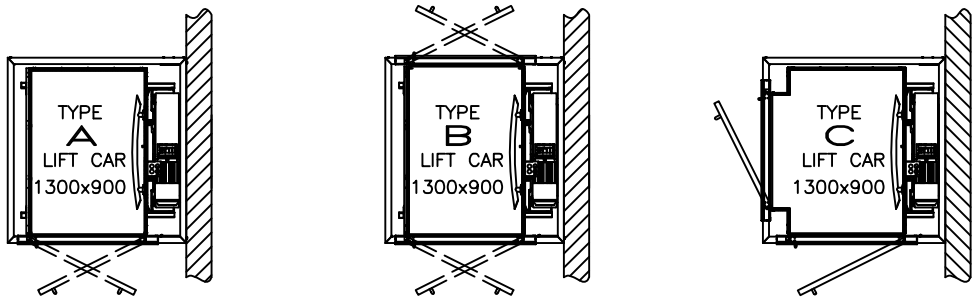

Liberty Rear Mast Car & Door Configuration Options

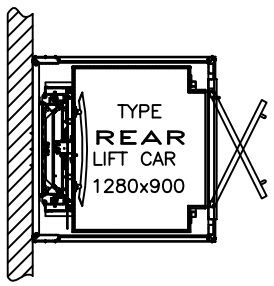

master lifts

Call 1300 454 387 www.masterlifts.com.au

Liberty

RESIDENTIAL LIFT

TRACTION DRIVE LIFT

COMPLIANCE WITH AS. 1735 Pt.18

CARRYING CAPACITY UP TO 300kg

© 2012 MASTER LIFTS

INSTALLATION TYPE

Liberty Mast, Car and Door Configuration

CAR TYPE

Type A - Single Entry
Type B - Through Car
Type C - Corner Car

CLIENT

Client Name

Not For Construction

INSTALLATION ADDRESS

STREET
CITY

STATE

SALES SIGNATURE:

PRINT NAME:

DRAWN: 0000	PAPER SIZE: A3
DATE: 00/00/0000	SCALE: N.T.S.
REVISION: A	CAD0000-0
JOB NO:	1 OF 1

REVISION HISTORY

REV	DESCRIPTION	DATE	APPROVED
A	FIRST DRAWING	00/00/0000	-