CHECK LIST
CLIENT MUST INITIAL

FRONT ELEVATION INI.:

PLAN VIEW INI.:

SIDE ELEVATION INI.:

SETDOWN DETAIL INI.:

FLOOR PENETRATION DETAIL INI.:

ROOF PENETRATION DETAIL INI.:

ROUGH DOOR OPENING DETAIL INI.:

CONTROL BOX LOCATION INI.:

COMMENTS:

CLIENT SIGNATURE:

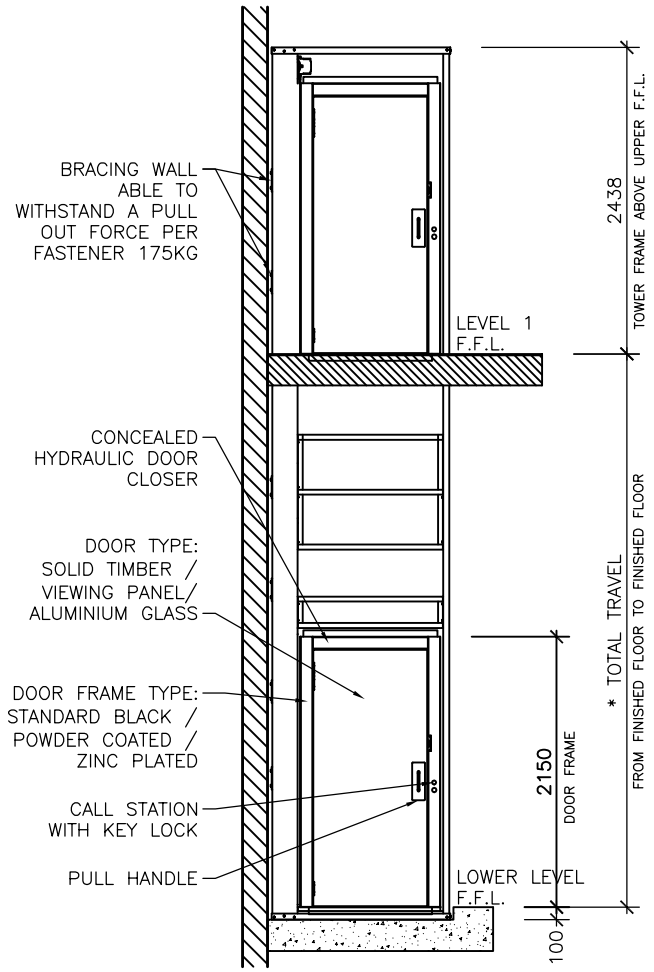

FRONT ELEVATION

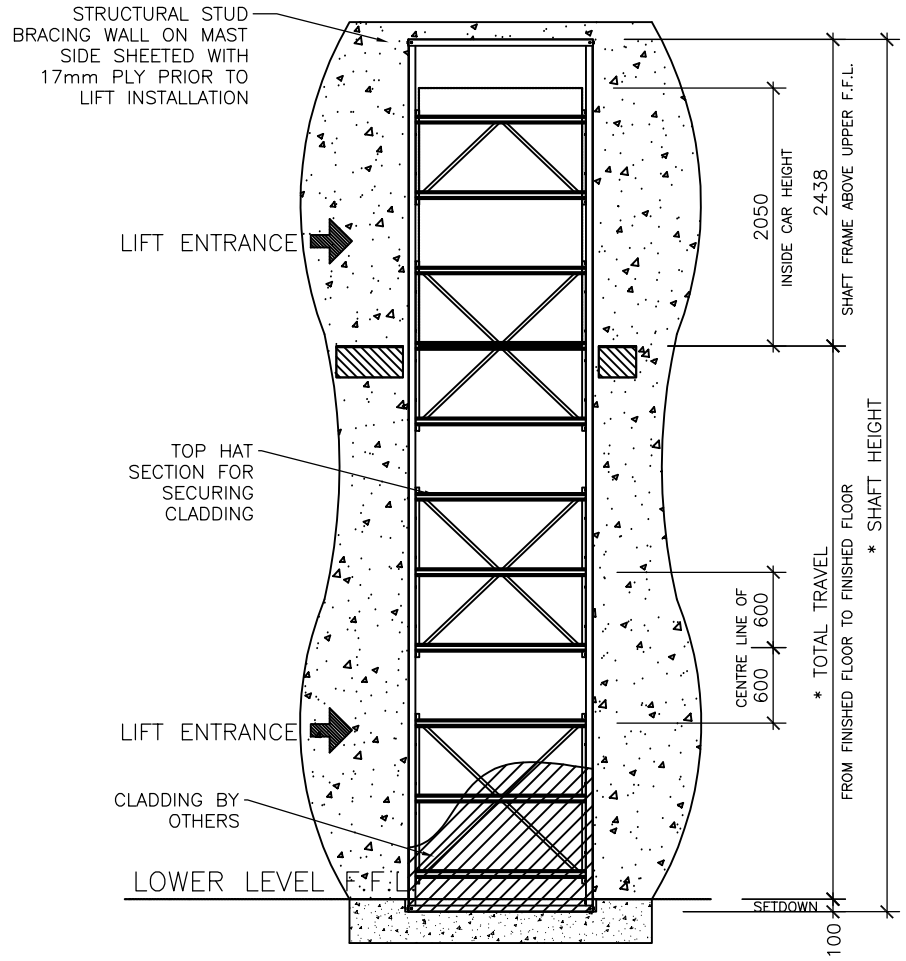

SIDE ELEVATION

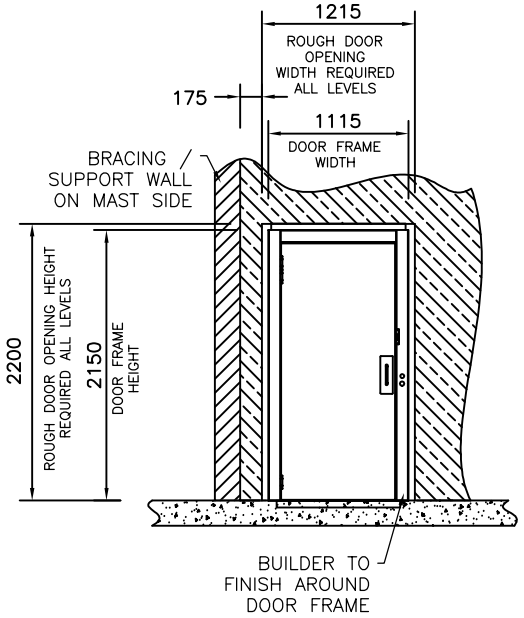

MINIMUM DOOR OPENING MEASUREMENTS

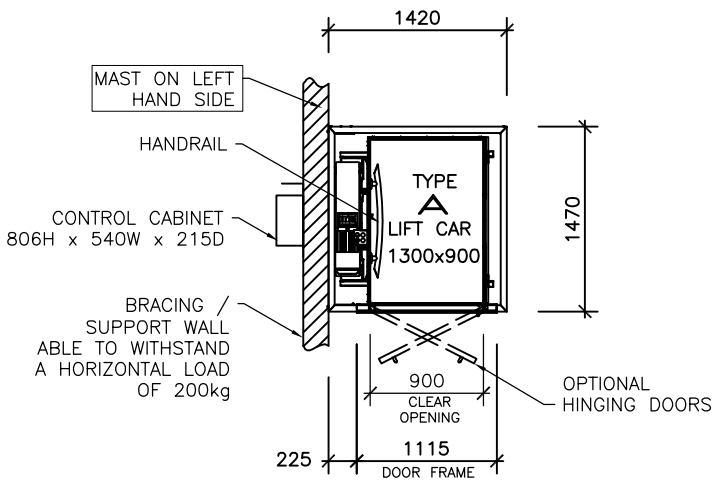

PLAN

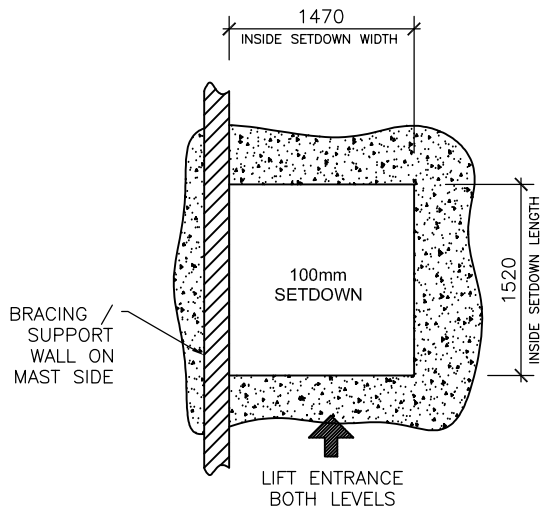

SETDOWN / FLOOR PENETRATION DETAIL

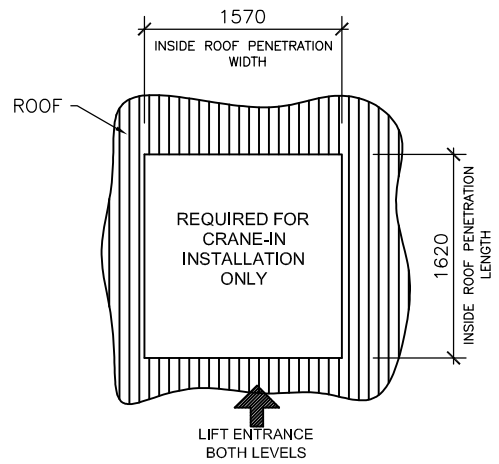

ROOF PENETRATION DETAIL

REVISION HISTORY

REV	DESCRIPTION	DATE	APPROVED
A	FIRST DRAWING	00/00/0000	-

master lifts

Call 1300 454 387 www.masterlifts.com.au

Liberty

RESIDENTIAL LIFT

TRACTION DRIVE LIFT

COMPLIANCE WITH AS. 1735 Pt.18

CARRYING CAPACITY UP TO 300kg

© 2012 MASTER LIFTS

INSTALLATION TYPE

DISMANTLE/ CRANE IN/ LEFT HAND MAST

CAR TYPE

Type A - Single Entry

CLIENT

Client Name

Not For Construction

INSTALLATION ADDRESS

STREET
CITY

STATE

SALES SIGNATURE:

PRINT NAME:

DRAWN: 0000	PAPER SIZE: A3
DATE: 00/00/0000	SCALE: N.T.S.
REVISION: A	CAD0000-0
JOB NO:	1 OF 1